FUNNET GOAL 4' x 6'

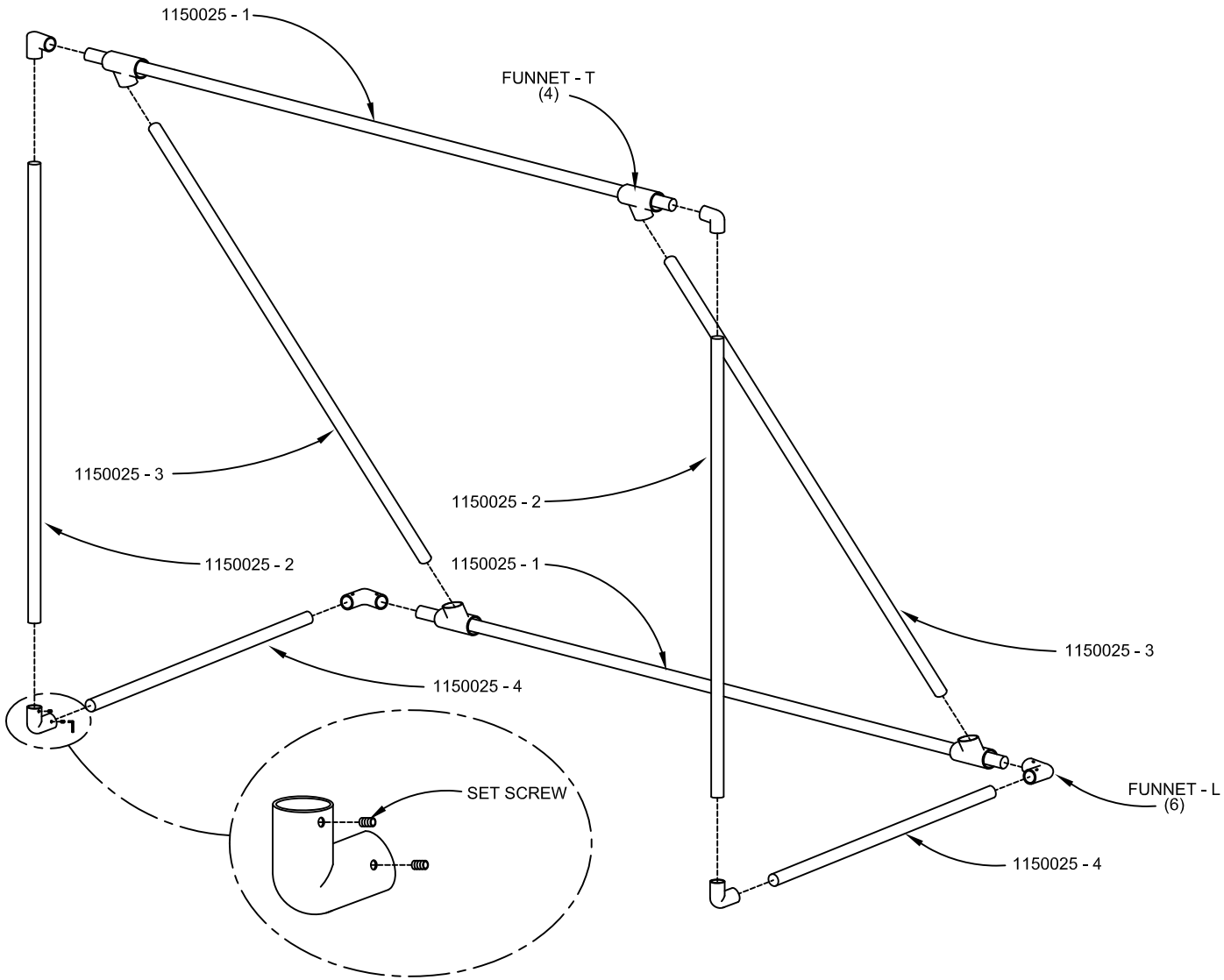

PACKAGE 4 GROUND STAKES (SEE GSTAKE), 28 10.0" TIE WRAPS AND 1 HEX KEY WRENCH PER CARTON.

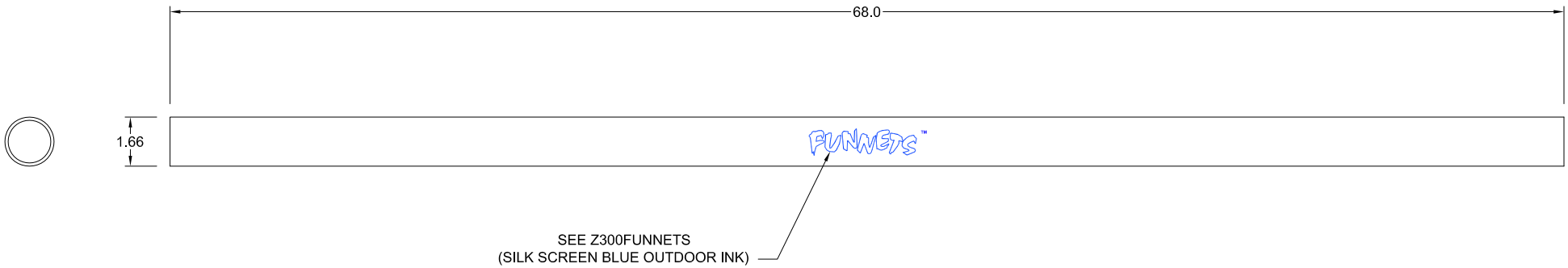

MATERIAL - 1.66 DIA. X .109w WHITE STRUCTURAL GRADE PVC PIPE
HIGH IMPACT, UV PROTECTED

TOLERANCE	BSN SPORTS	1901 Diplomat Drive Farmers Branch, Texas 75234	
.X = ±.030	DRAWN	*Z.OSORIO*	4/15
.XX = ±.010	CHECKED		
.XXX = ±.005	APPROVED		
FRACTIONAL = ± 1/32	*TITLE*		
UNLESS OTHERWISE NOTED			
REV: / DATE:			
REF:	SCALE: N.T.S.	NUMBER 1150025 - 1	

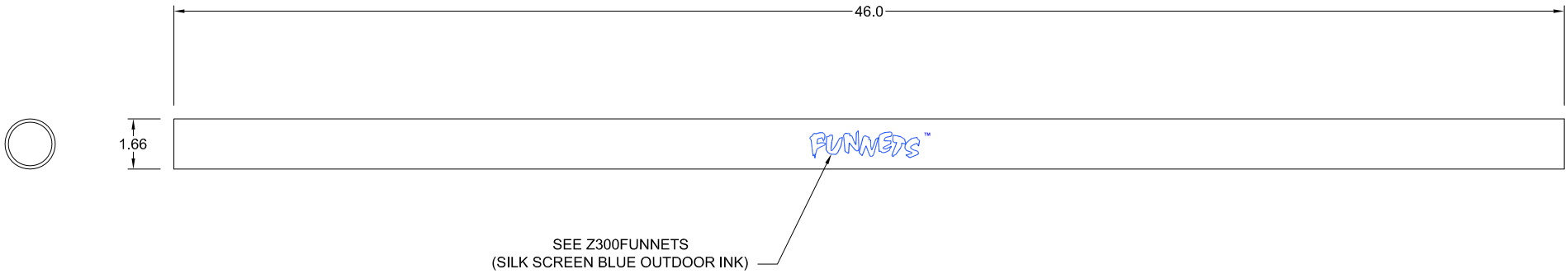

MATERIAL - 1.66 DIA. X .109w WHITE STRUCTURAL GRADE PVC PIPE
HIGH IMPACT, UV PROTECTED

TOLERANCE	BSN SPORTS	1901 Diplomat Drive Farmers Branch, Texas 75234	
.X = ±.030	DRAWN	*Z.OSORIO*	4/15
.XX = ±.010	CHECKED		
.XXX = ±.005	APPROVED		
FRACTIONAL = ± 1/32	*TITLE*		
UNLESS OTHERWISE NOTED			
REV: / DATE:			
REF:	SCALE: N.T.S.	NUMBER 1150025 - 2	

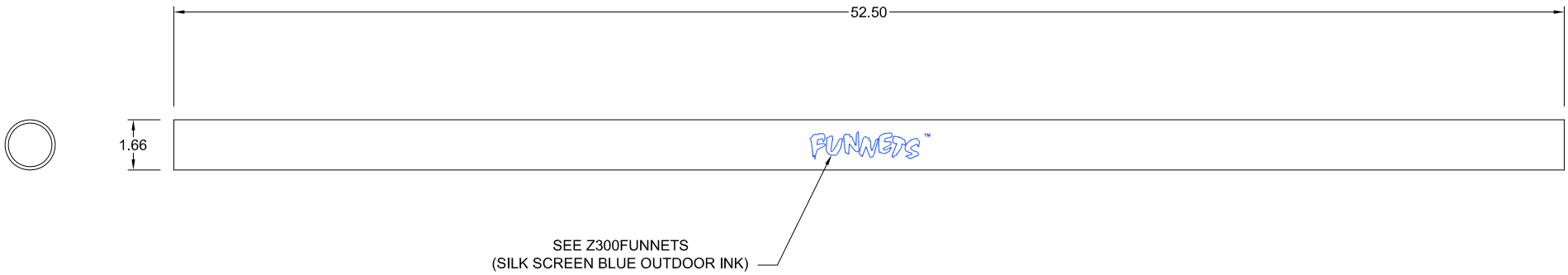

MATERIAL - 1.66 DIA. X .109w WHITE STRUCTURAL GRADE PVC PIPE
HIGH IMPACT, UV PROTECTED

TOLERANCE .X = ±.030 .XX = ±.010 .XXX = ±.005 FRACTIONAL = ± 1/32 UNLESS OTHERWISE NOTED	BSN SPORTS	1901 Diplomat Drive Farmers Branch, Texas 75234	
	DRAWN	Z.OSORIO	4/15
	CHECKED		
	APPROVED		
	TITLE		
REV: / DATE:			
REF:	SCALE: N.T.S.	NUMBER 1150025 - 3	

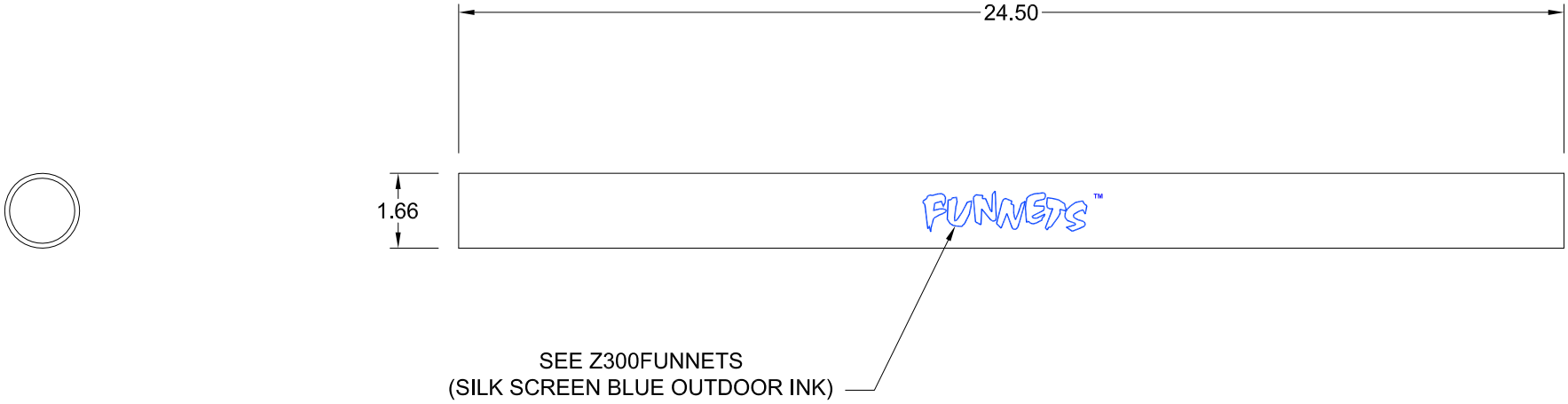

MATERIAL - 1.66 DIA. X .109w WHITE STRUCTURAL GRADE PVC PIPE
HIGH IMPACT, UV PROTECTED

TOLERANCE	BSN SPORTS	1901 Diplomat Drive Farmers Branch, Texas 75234	
.X = ±.030	DRAWN	*Z.OSORIO*	4/15
.XX = ±.010	CHECKED		
.XXX = ±.005	APPROVED		
FRACTIONAL = ± 1/32	*TITLE*		
UNLESS OTHERWISE NOTED			
REV: / DATE:			
REF:	SCALE: N.T.S.	NUMBER 1150025 - 4	

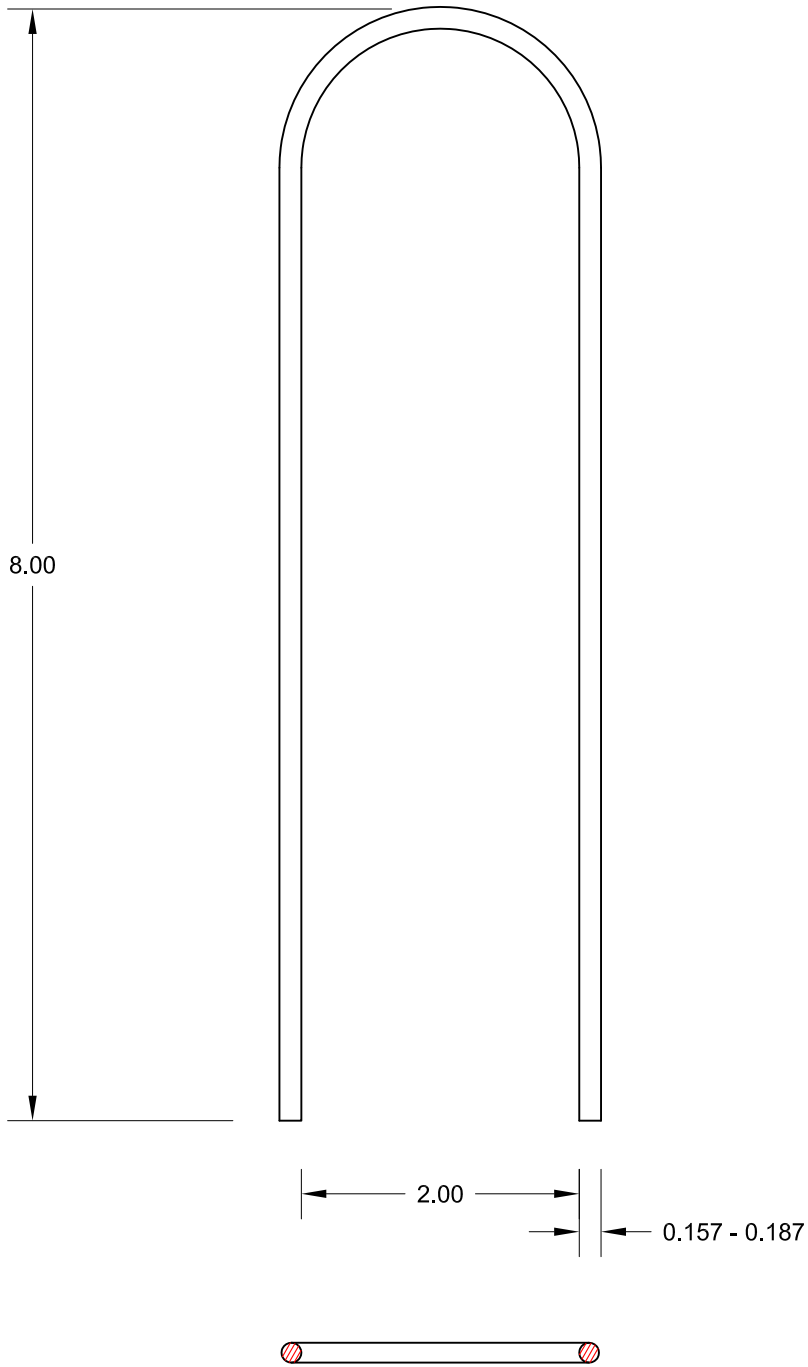

MATERIAL - .187 OR 4mm STEEL ROD Z/P

TOLERANCE .X = ±.030 .XX = ±.010 .XXX = ±.005 FRACTIONAL = ± 1/32 UNLESS OTHERWISE NOTED	BSN SPORTS	1901 Diplomat Drive Farmers Branch, Texas 75234	
	DRAWN	Z. OSORIO	4/15
	CHECKED		
	APPROVED		
REV / DATE	TITLE	GROUND STAKE	
REF:	SCALE: NTS	NUMBER GSTAKE	

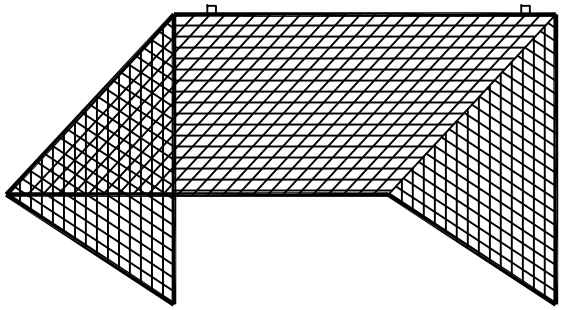

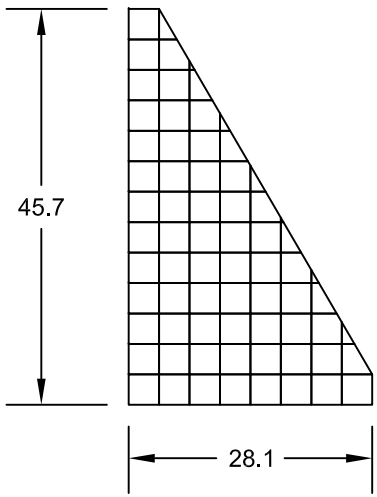

SIDE PANEL

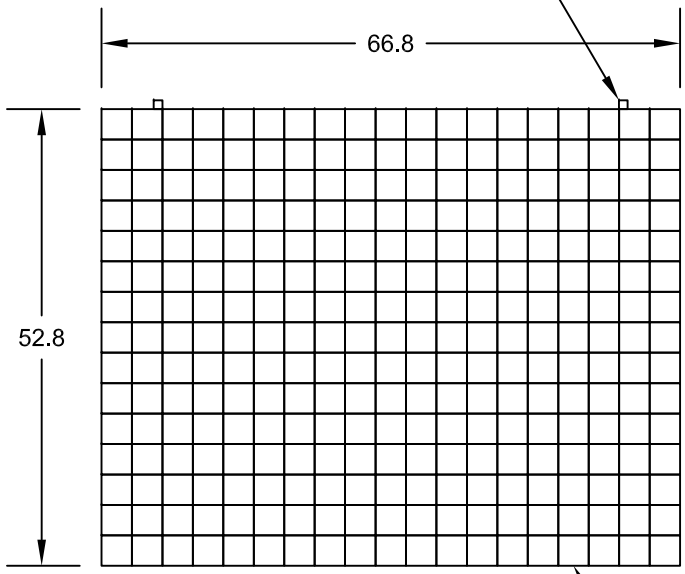

BACK PANEL

OVERLOCK STITCHED
PERIMETER
TYP

MATERIAL - 3.5" MESH X 3mm BRAIDED, KNOTTED PE - BLUE

TOLERANCE	BSN SPORTS	1901 Diplomat Drive Farmers Branch, Texas 75234	
.X = ±.030	DRAWN	*Z.OSORIO*	5/15
.XX = ±.010	CHECKED		
.XXX = ±.005	APPROVED		
FRACTIONAL = ± 1/32	TITLE		
UNLESS OTHERWISE NOTED			
REV / DATE			
REF:	SCALE: NTS	NUMBER 1150049	

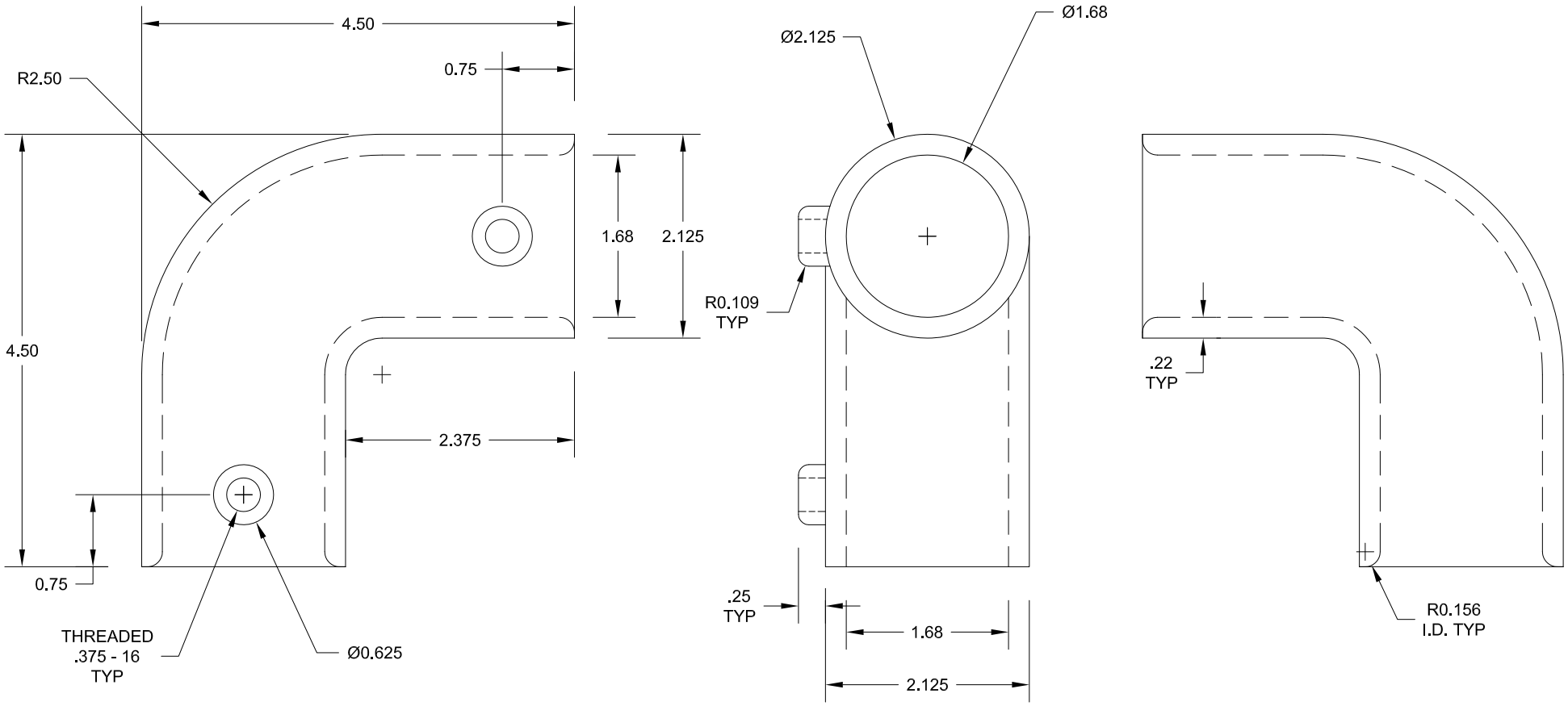

MATERIAL - HIGH IMPACT, UV PROTECTED, WHITE ABS.
2 EACH .375 x .5 SET SCREWS Z/P INCLUDED

TOLERANCE .X = ±.030 .XX = ±.010 .XXX = ±.005 FRACTIONAL = ± 1/32 UNLESS OTHERWISE NOTED	BSN SPORTS	1901 Diplomat Drive Farmers Branch, Texas 75234	
	DRAWN	Z. OSORIO	4/15
	CHECKED		
	APPROVED		
	TITLE		
REV / DATE			
REF:	SCALE: NTS	NUMBER FUNNET - L	

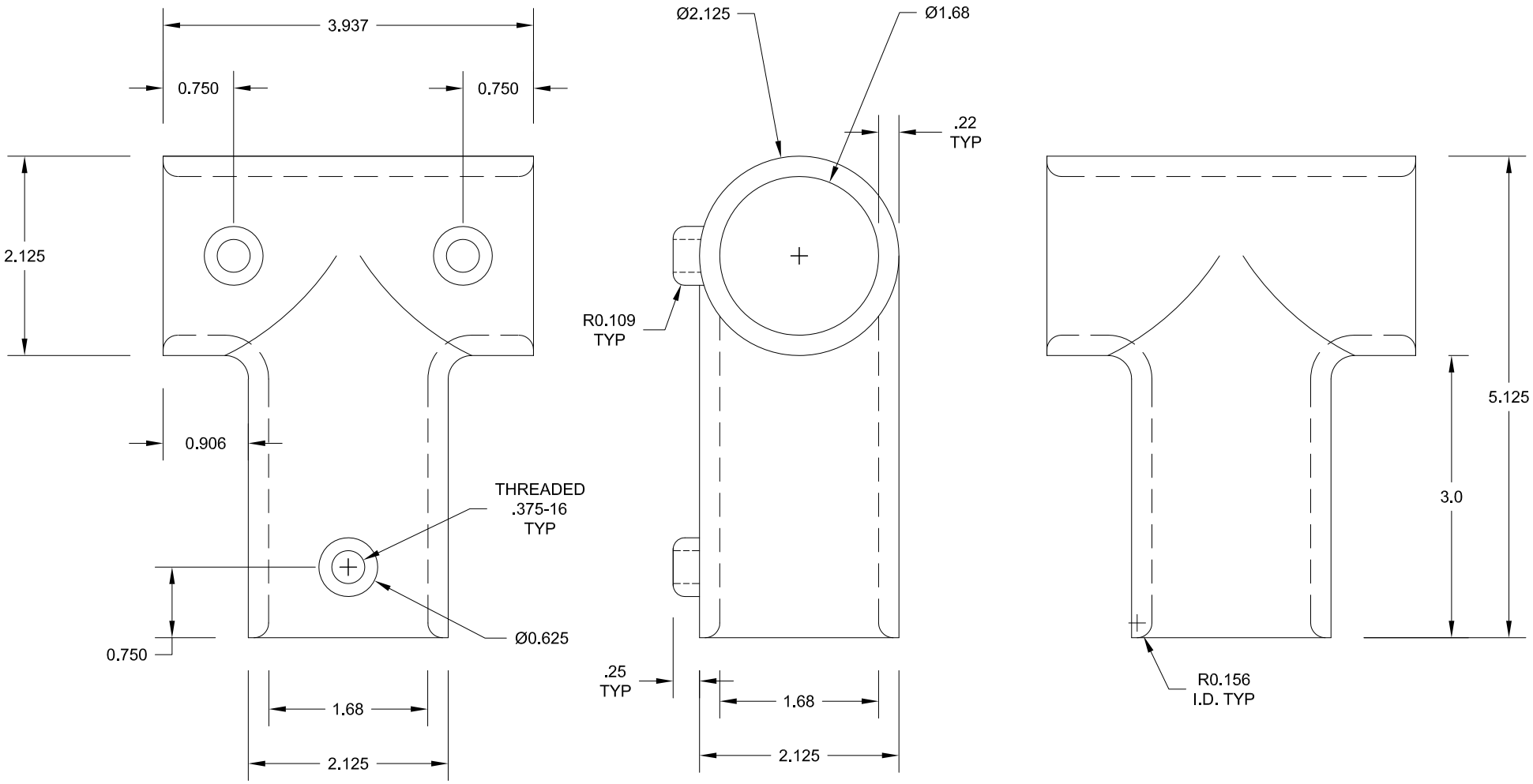

MATERIAL - HIGH IMPACT, UV PROTECTED, WHITE ABS.
2 EACH .375 x .5 SET SCREWS Z/P INCLUDED

TOLERANCE .X = ±.030 .XX = ±.010 .XXX = ±.005 FRACTIONAL = ± 1/32 UNLESS OTHERWISE NOTED	BSN SPORTS	1901 Diplomat Drive Farmers Branch, Texas 75234	
	DRAWN	Z. OSORIO	4/15
	CHECKED		
	APPROVED		
	TITLE		
REV / DATE			
REF:	SCALE: NTS	NUMBER FUNNET - T	

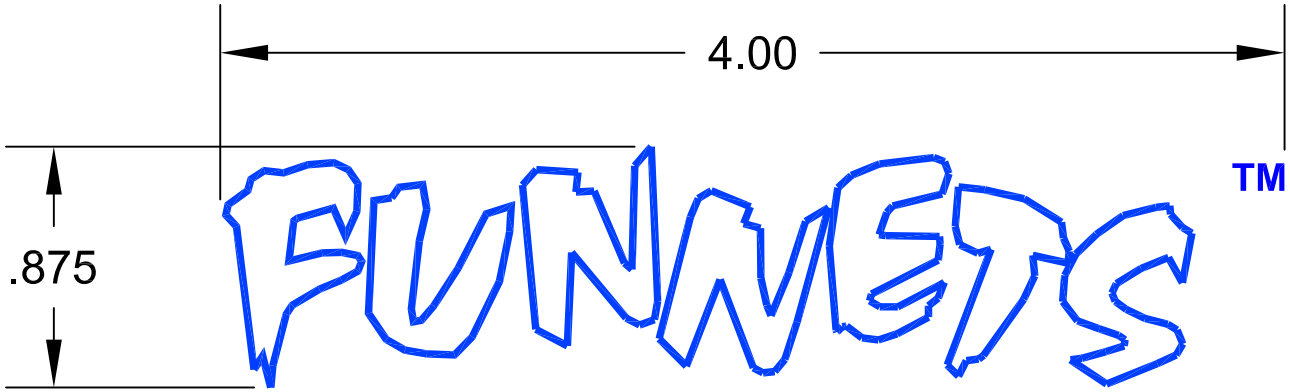

NOTES:

1) ALL CHARACTERS BLUE
2) OUTDOOR MATERIALS.

TOLERANCE .X = ±.030 .XX = ±.010 .XXX = ±.005 FRACTIONAL = ± 1/32 UNLESS OTHERWISE NOTED	BSN SPORTS	1901 Diplomat Drive Farmers Branch, Texas 75234	
	DRAWN	Z. OSORIO	5/15
	CHECKED		
	APPROVED		
REV / DATE	TITLE		
REF:	SCALE:	NUMBER Z300FUNNETS	